Current part is item (2) on diagram. Available at www.oshkoshequipment.com

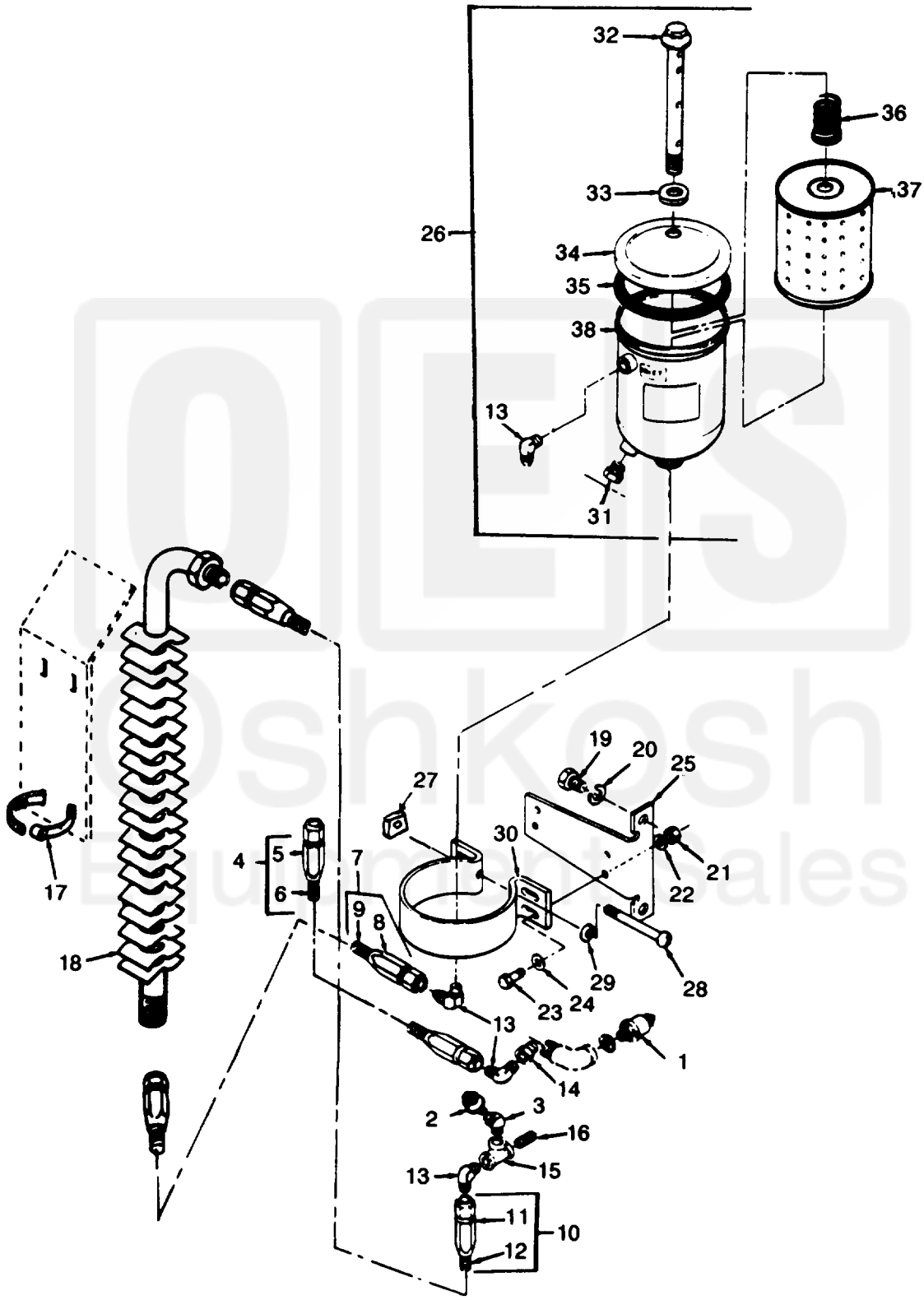

Figure 63. Oil filter and sensors.

Current part is item (2) on diagram. Available at www.oshkoshequipment.com

Current part is item (2) on diagram. Available at www.oshkoshequipment.com

(1) ILLUSTRATION A FIG. NO.	B ITEM NO.	(2) SMR CODE A ARMY	B AIR FORCE	C NAVY	D USMC	(3) A SSI	B REPL FACTOR	(4) NATIONAL STOCK NUMBER	(5) DESCRIPTION REF NUMBER & MFR CODE	USABLE ON CODE	(6) U/M	(7) QTY INC IN UNITS	(8) USMC QTY PER EQUIP
63	1	PAOZZ	PAOZZ	PAGZZ	PAOZZ		.050	6620-01-154-8425	TRANSMITTER: OIL PRESSURE 69-779-1 30554 506-AL 57733		EA	1	1
63	2	PAOZZ	PAOZZ	PAGZZ	PAOZZ		.050	5930-00-621-7133	SWITCH, SAFETY: OIL PRESSURE 72-2278 30554 SP-2Z-17FA 85814		EA	1	1
63	3	PAOZZ	PAOZZ	PAGZZ	PAOZZ	D	.006		ELBOW, PIPE: SAFETY SWITCH 6939A 28265		EA	1	1
63	4	MFFZZ	AOO	AGGGG	MFDZZ				LINE ASSEMBLY: OIL FILTER 206-2838-A5 28265 MANUFACTURE FROM:		EA	1	1
63	5	PAFZZ	PAOZZ	PAGZZ	PAOZZ	D	.008	4730-00-842-2202	FITTING, HOSE MS24587-8 96906		EA	2	2
63	6	PAFZZ	PAOZZ	PAGZZ	PAOZZ	D	.070	4720-00-542-4433	HOSE, FUEL MILH8794-8 81349		FT	2	4
63	7	MFFZZ	PAOZZ	AGGGG	MFOZZ				HOSE ASSEMBLY, OIL: COOLER TO FILTER MS28741-8-0320 96906 MANUFACTURE FROM:	CLC,DGG	EA	1	1
63	8	PAFZZ	PAOZZ	PAGZZ	PAOZZ	D	.047	4730-00-842-2202	FITTING MS24578-8 96906	CLC,DGG	EA	2	
63	9	PAFZZ	PAOZZ	PAGZZ	PAOZZ	D	.070	4720-00-542-4433	HOSE MILH8794-8 81349	CLC,DGG	FT	V	
63	10	MFFZZ	PAOZZ	AGGGG	MFOZZ				HOSE ASSEMBLY, OIL: COOLER TO BLOCK MS28741-5-0220 96906 MANUFACTURE FROM:	CLC	EA	4	
63	10	MFFZZ	PAOZZ	AGGGG	MFOZZ				HOSE ASSEMBLY, OIL: COOLER TO BLOCK MS28741-5-0020 96906 MANUFACTURE FROM:	CLC	EA	4	
63	10	MFFZZ	PAOZZ		MFOZZ				HOSE ASSEMBLY, OIL: COOLER TO BLOCK MS28741-8-0220 96906 MANUFACTURE FROM:	CGG	EA	4	
63	11	PAFZZ	PAOZZ	PAGZZ	PAOZZ	D	.047	4730-00-842-2202	FITTING MS24587-8 96906	CLC	EA	2	
63	11	PAFZZ	PAOZZ		PAOZZ	D	.047	4730-00-842-2202	FITTING MS24587-5 96906	DGG	EA	2	
63	12	PAFZZ	PAOZZ		PAOZZ	D	.070	4730-00-289-9197	HOSE MILH8794-5 81349	DGG	FT	V	
63	12	PAFZZ	PAOZZ	PAGZZ	PAOZZ	D	.070	4720-00-542-4433	HOSE MILH8794-8 96906	CLC	FT		
63	13	PAFZZ	PAOZZ	PAGZZ	PAOZZ	D	.006	4730-00-359-3103	ELBOW 206728A 28265 MS51504-B-8 28265 10460 89749		EA	4	
63	14	XBFZZ	PAOZZ	XBGZZ	XBOZZ			4730-00-289-4736	ADAPTER: OIL HOSE TO BLOCK 3200X6 79470		EA	1	1
63	15	PAFZZ	XO	PAGZZ	PAOZZ	D	.006		TEE, PIPE OIL LINE TO BLOCK 3200X6 45681		EA	1	
63	16	PAFZZ	XC	PAGZZ	PAOZZ	D	.047		NIPPLE, PIPE OIL LINE TO BLOCK 8FTX 45681		EA	1	
63	17	PAFZZ	PAOZZ	PAGZZ	PAOZZ	D	.008	4730-00-908-3193	CLAMP, HOSE OIL COOLER MTG MS35842-12 96906	CLC,DGG	EA	2	2

Current part is item (2) on diagram. Available at www.oshkoshequipment.com